Chapter 3. Problems

"All programming problems should include design pseudo code either as a separate design document on embedded comments in the code."

1S. What are the functionalities available onboard PICmicro in addition to a CPU.

Solution

* Program and Data memory beyond registers
* Internal Oscillator
* A/D Converter
* More extensive Timers
* Parallel-to-Serial & Serial-to-Parallel converter (USART)
* …

1U. Identify pins used for external Oscillator connection to the PIC micro 18F1220.

Solution

2S. Identify pins used for external interrupts and corresponding SFRs to monitor and control their behaviors.

Solution

PINS: INT0 "Pin 8", INT1 "Pin 9", INT2 "Pin 17"
SFR Registers: INTCON, INTCON2, INTCON3, RCON, IPR1, PIR1, PIE1, IPR2, PIR2, PIE2, …

2U. What range of addresses are used of Special Function Registers (SFRs) and what is the lowest addressed SFR.

Solution

3S. What are the maximum number of Digital I/Os that can be configured assuming you need to have external reset and at least one external interrupt.

Solution

Other than Power (pin 14), Ground (pin 5) and MCLR/RA5 (Pin 4), the other 15 pins are available for Input / Output. But the problem requires an additional pin for interrupt therefore only 14 pins are available for I/O.

3U. What are the maximum number of Digital output pins available if Port B has to be configured as input.

Solution

4S. Write the initialization code that configures the 4 least significant bits of Port A as input and all of port B as output.

Solution

```
#include p18f1220.inc          ;Constants/definitions for PICmicro
    CLRF    PORTA               ; Initialize PORTA
    CLRF    PORTB               ; Initialize PORTB
    MOVLW   0x7F
    MOVWF   ADCON1              ; Set all Pins as digital I/O pins
    MOVLW   0x00                ; Value used to initialize data direction
    MOVWF   TRISB               ; Set Port B RB<7:0> as outputs
```

```
        MOVLW   0x0F            ; Value used to initialize data direction
        MOVWF   TRISA           ; Set Port A <0:3> as input
```

4U. Write the initialization code that configures the 4 most significant bits of Port B as input and all of port A as output.

Solution

5S. Draw a schematic and write code that accepts input on bit 0 of port B. Every time this input is changed from 0 to 1, the value presented on Port A <0:3> increments by one.

Solution

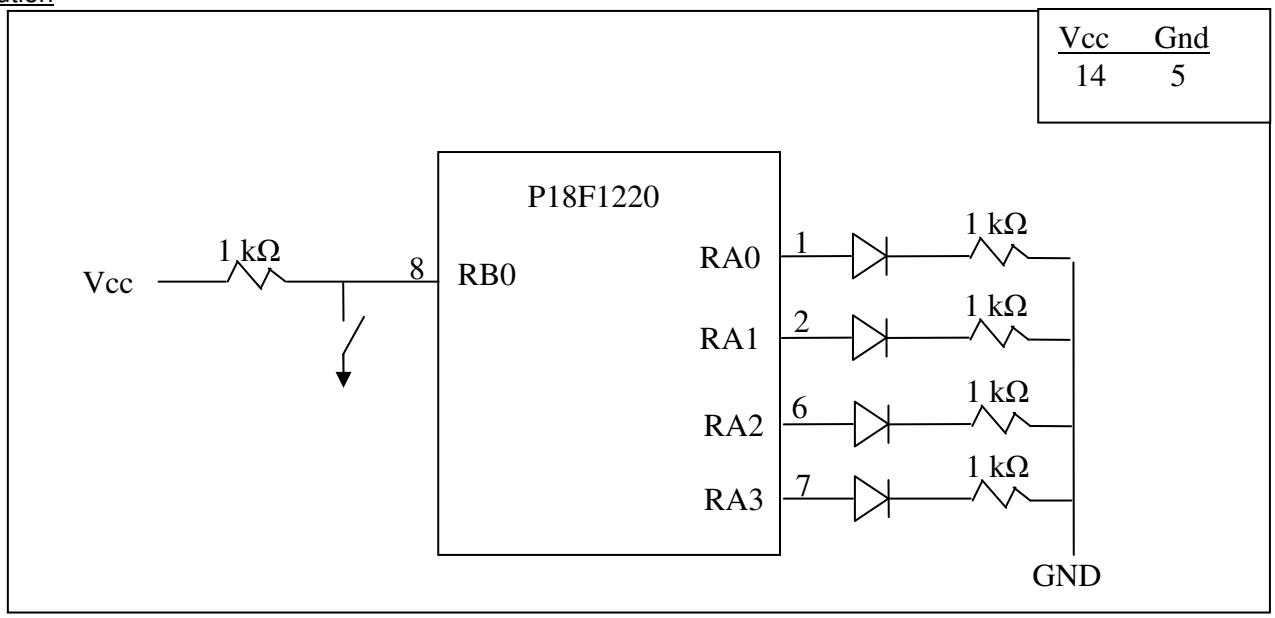


```
#include p18f1220.inc          ;Constants/definitions for PICmicro
        CLRF    PORTA           ; Initialize PORTA
        CLRF    PORTB           ; Initialize PORTB
        MOVLW   0x7F
        MOVWF   ADCON1          ; Set all Pins as digital I/O pins
        MOVLW   0x01            ; Value used to initialize data direction
        MOVWF   TRISB           ; Set Port B RB0 as input
        MOVLW   0x00            ; Value used to initialize data direction
        MOVWF   TRISA           ; Set Port A <0:7> as output

w_one:  BTFSC   PORTB,0         ; check input transition from 0 to 1.
        BRA     w_one

w_zero: BTFSC   PORTB,0         ; waiting for 0
        BRA     step0to1
        BRA     w_zero

step0to1: INCF  PORTA
          BRA   w_one
```

5U. Draw a schematic and write the code that accepts input on bit 2 of port A. Every time this input is changed from 1 to 0, the value presented on Port B<0:7> increments by one.

Solution

6S. Write an assembly program that accepts inputs from port A<0:7> and left shift (not Rotate) the data by 2 before outputting the data to port B<0:7>.

Solution

```
#include p18f1220.inc                    ;Constants/definitions for PICmicro

        MOVLW   0x7F
        MOVWF   ADCON1                    ; Set all Pins as digital I/O pins
        SETF    TRISA                     ; Set Port A as input
        CLRF    TRISB                     ; Set Port B as output

        MOVFF   PORTA,PORTB               ; check input transition from 0 to 1.
        RLNCF   PORTB,1                   ; Shift left one bit
        BCF     PORTB,0
        RLNCF   PORTB,1                   ; Shift left one bit
        BCF     PORTB,0

done:   BRA     done
```

6U. Write an assembly program that accepts inputs from port B<0:7> and right shift (not Rotate) the data by 3 before outputting the data to port A<0:7>.

Solution

7S. What is the effect of the assembly directive “org 200h” on the following assembly instruction set?

```
org 200h

CLRF    PORTA       ; Initialize PORTA
CLRF    PORTB       ; Initialize PORTB
MOVLW   0x7F
```

Solution

The directive put the first assembly code at location 200 hex of program memory..

7U. Determine the value that will be stored in program memory locations 54 hex and 62 hex.

```
org 50h

CLRF    PORTA       ; Initialize PORTA
CLRF    PORTB       ; Initialize PORTB
MOVLW   0x7F
```

Solution

8U. Define a problem that can be solved using the concepts presented in this chapter and complete the solution to your selected problem.

Solution