1S. The Op Amp in the circuit shown below is ideal.

a) Calculate Vo if Va = 4 V and Vb = 0 V.
b) Calculate Vo if Va = 2 V and Vb = 0 V.
c) Calculate Vo if Va = 2 V and Vb = 1 V.
d) Calculate Vo if Va = 1 V and Vb = 2 V.
e) If Vb = 1.6 V, specify the range of Va such that the amplifier does not saturate.

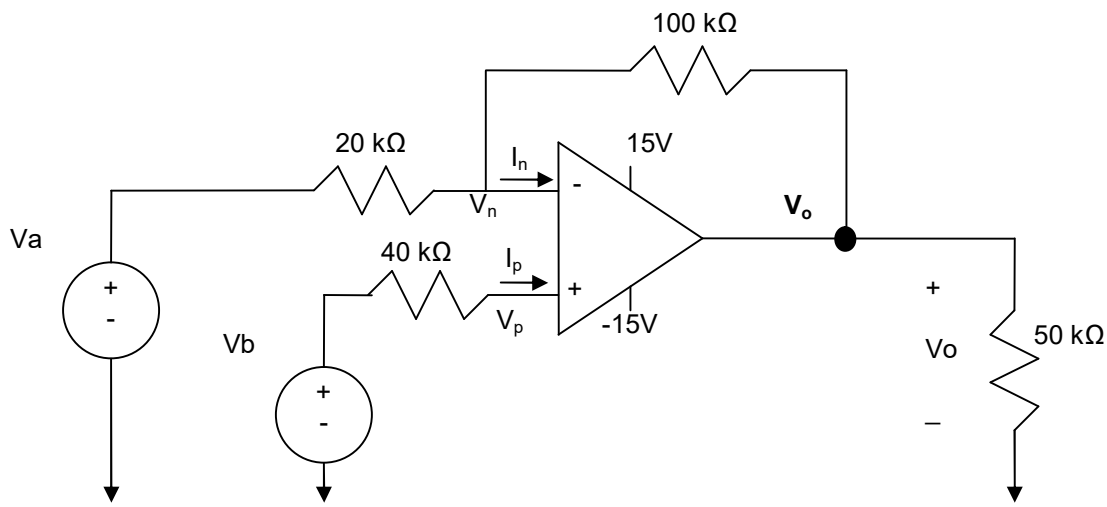

Solution:

a, b, c and d)

$$KCL\ at\ Node\ Vn \rightarrow \frac{V_n - V_a}{20} + \frac{V_n - V_o}{100} = 0$$

$$Ideal\ Op\ Amp \rightarrow Ip = In = 0 \rightarrow V_n = V_p = V_b$$

$$Apply\ to\ KCL\ equation \rightarrow \frac{V_n - V_a}{20} + \frac{V_n - V_o}{100} = 0 \rightarrow \frac{V_b - V_a}{20} + \frac{V_b - V_o}{100} = 0$$

$$\rightarrow V_o = 6V_b - 5V_a$$

Use the above relationship to answer the problem parts a, b, c and d. Note that calculated value of Vo must be limited by the V_{CC} limits (-15 and +15)

Part	Va (V)	Vb (V)	Vo (V)	Comment
a	4	0	-20	Vo will be limited to -15V due to saturation
b	2	0	-10	Linear Region
c	2	1	-4	Linear Region
d	1	2	7	Linear Region

e)

In order for the Op Amp not to saturate its output must satisfy $-15 \le Vo \le 15$
given $V_b = 1.6$ V
→ $-15 \le 6V_b - 5V_a \le 15$ → $-1.08 \le V_a \le 4.92$

1U. The Op Amp in the circuit shown below is ideal.

a) Calculate Vo if Va = 2 mV and Vb = 0 V.
b) Calculate Vo if Va = 100 mV and Vb = 20 mV.

c) Calculate Vo if Va = 2 V and Vb = 1 V.
d) Calculate Vo if Va = 2 V and Vb = 2.1 V.
e) If Vb = 1.2 V, specify the range of Va such that the amplifier does not saturate.

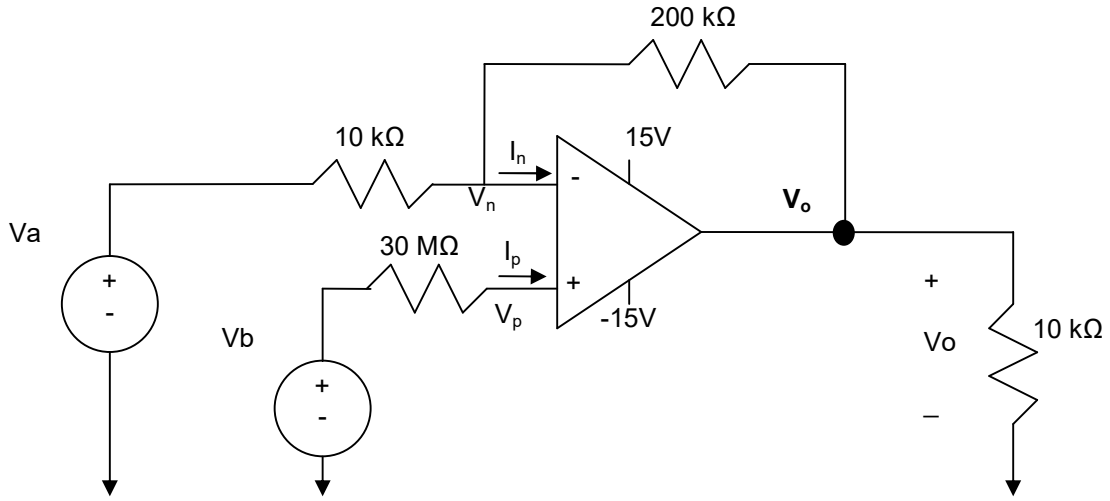

Solution:

2S. Find i_o in the following circuit if the Op Amp is ideal

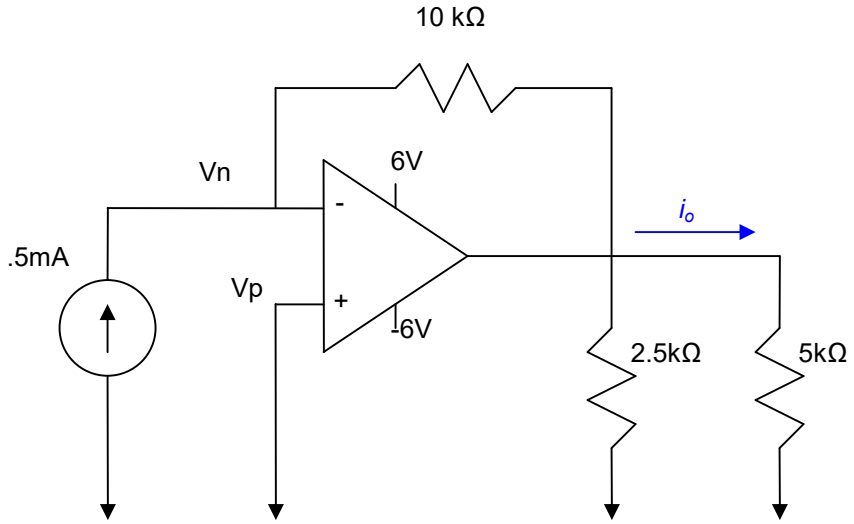

Solution:

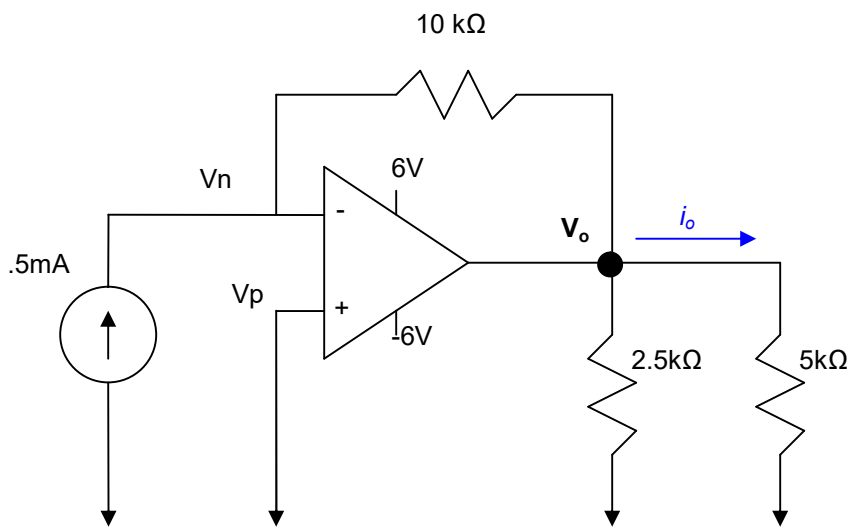

$$KCL\ at\ Node\ Vn \rightarrow -0.5 + \frac{V_n - V_o}{10} = 0$$

$$Ideal\ Op\ Amp \rightarrow Ip = In = 0 \rightarrow V_n = V_p = 0$$

$$Apply\ to\ KCL\ equation \rightarrow V_o = -5\ V$$

$$\rightarrow I\sigma = \frac{V_o}{R} = \frac{-5}{5} = -1\ mA$$

2U. Find Ix in the following circuit if the Op Amp is ideal

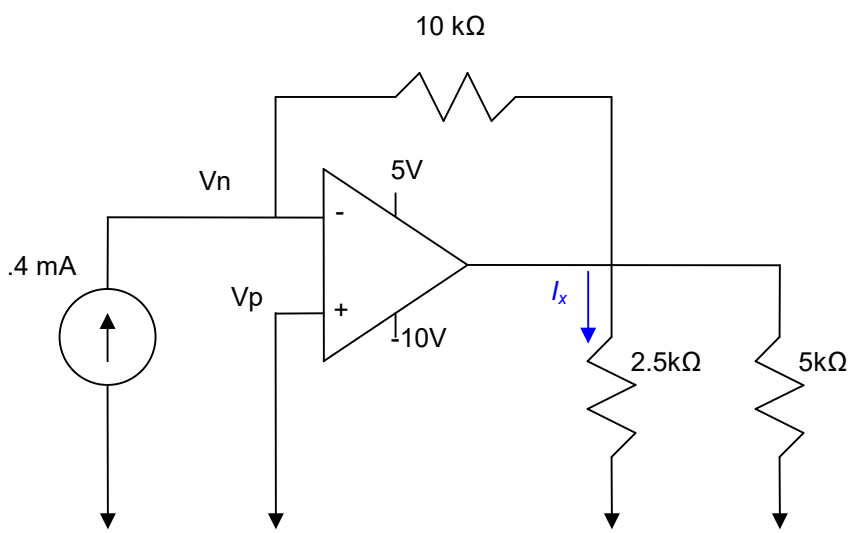

Solution:

3S. The Op Amp in the following circuit is ideal

a) What Op Amp circuit configuration is this?

b) Calculate Vo

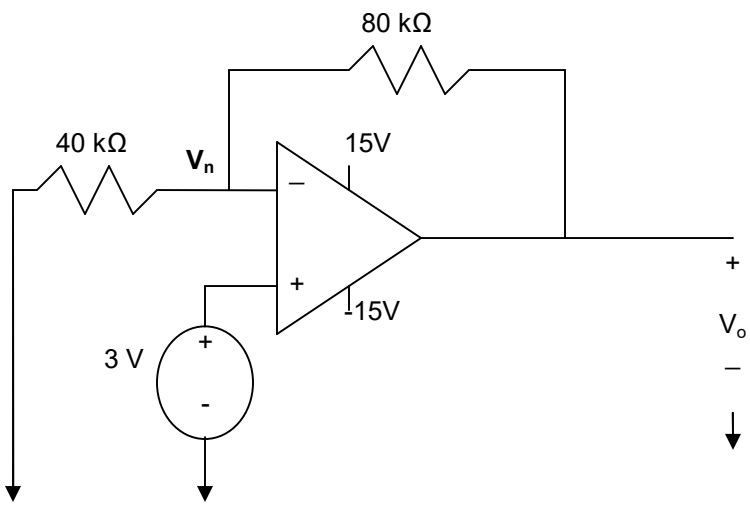

Solution:

a) non-Inverting amplifier – Source is connected to positive input terminal

b) Vo = ?

$$KCL\ at\ Node\ Vn \rightarrow \frac{V_n}{40} + \frac{V_n - V_o}{80} = 0$$

$$Ideal\ Op\ Amp \rightarrow Ip = In = 0 \rightarrow V_n = V_p = 3$$

$$Apply\ to\ KCL\ equation \rightarrow \frac{3}{40} + \frac{3 - V_o}{80} = 0 \rightarrow V_o = 9\ V$$

3U. The Op Amp in the following circuit is ideal

a) What Op Amp circuit configuration is this?

b) Calculate Vo

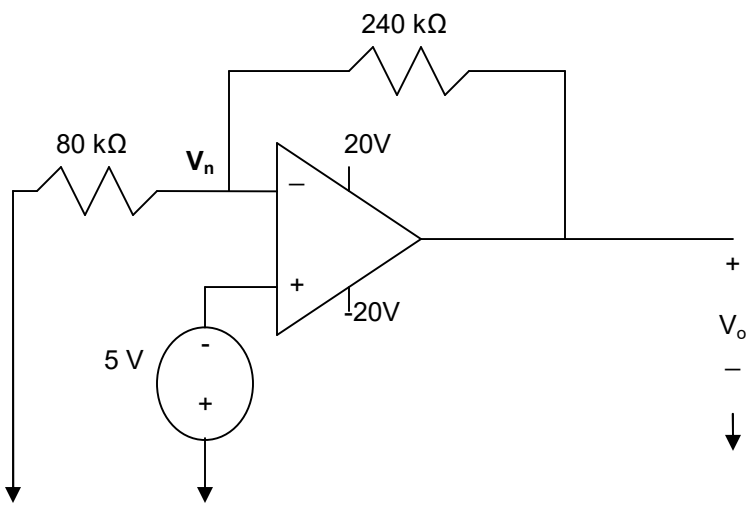

Solution:

4S. The Op Amp in the following figure is ideal.

a) What circuit configuration is shown in the figure?

b) Find Vo if Va = 1.2 V, Vb = -1.5 V and Vc = 4 V.

c) The voltage Va and Vc remain at 1.2 V and 4 V, respectively. What are the limits on Vb if the Op Amp

operates within its linear region?

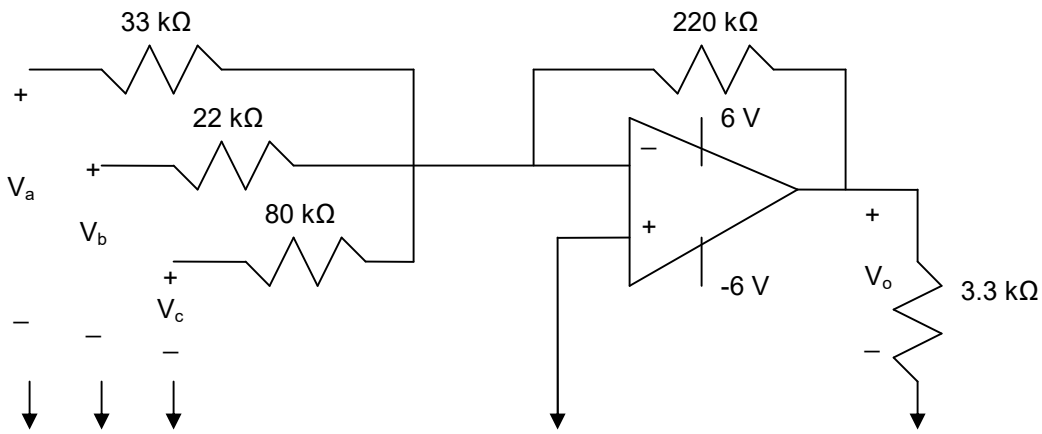

Solution:

a) Inverting summing amplifier – Multiple sources are connected to negative input terminal

b) Find Vo?

$$KCL\ at\ Node\ Vn \rightarrow \frac{V_n - V_a}{33} + \frac{V_n - V_b}{22} + \frac{V_n - V_c}{80} + \frac{V_n - V_o}{220} = 0$$

$$Ideal\ Op\ Amp \rightarrow Ip = In = 0 \rightarrow V_n = V_p = 0$$

$$Apply\ to\ KCL\ equation \rightarrow -\frac{V_a}{33} - \frac{V_b}{22} - \frac{V_c}{80} - \frac{V_o}{220} = 0 \rightarrow V_o = -220(\frac{V_a}{33} + \frac{V_b}{22} + \frac{V_c}{80})$$

$$V_o = -4\ V$$

c) Limits of Vb if Va and Vc remain unchanged

We can rewrite Vo and set it to V_{CC} limit to ensure linearity

$-6 \le Vo \le 6$

$-6 \le -220(+1.2/33 + Vb/22 + 4/80) \le 6$

$-6 \le -10Vb - 19 \le 6$

$-2.5 \le Vb \le -1.3$

4U. The Op Amp in the following figure is ideal.

a) What circuit configuration is shown in the figure?

b) Find Vo if Va = 2 V, Vb = -2 V and Vc = 4 V.

c) The voltage Va and Vc remain at 2 V and 4 V, respectively. What are the limits on Vb if the Op Amp operates within its linear region?

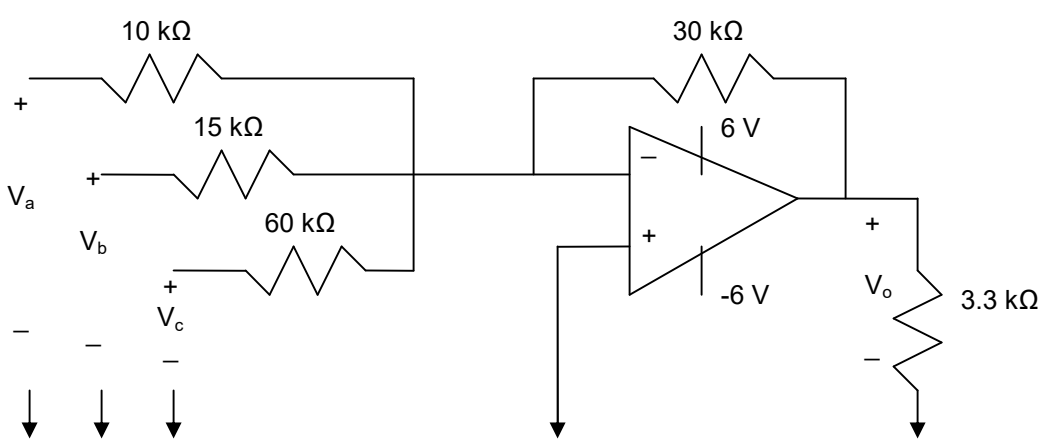

Solution:

4Sb.

a) The Op Amp in the following circuit is ideal. Find Vo if Va=4V, Vb=9V, Vc=13V and Vd=8V.

b) Assume Vb, Vc, Vd retain their values from part (a). Specify the range Va such that the Op Amp operates within its linear region.

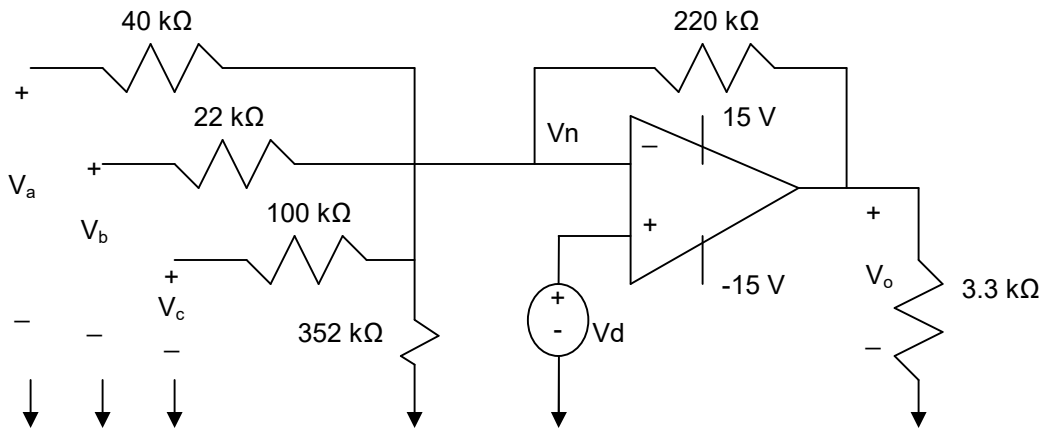

Solution:

a) Find Vo where Va=4 V, Vb=9 V, Vc=13 V, Vd =8 V

$$KCL\ at\ Node\ Vn \rightarrow \frac{V_n - V_a}{40} + \frac{V_n - V_b}{22} + \frac{V_n - V_c}{100} + \frac{V_n}{352} + \frac{V_n - V_o}{220} = 0$$

$$Ideal\ Op\ Amp \rightarrow Ip = In = 0 \rightarrow V_n = V_p = 8$$

$$Apply\ to\ KCL\ equation \rightarrow \frac{8-4}{40} + \frac{8-9}{22} + \frac{8-13}{100} + \frac{8}{352} + \frac{8 - V_o}{220} = 0$$

$$V_o = 14\,V$$

c) Range of Va so Op Amp is in linear region if all else stay the same as (a)

We can rewrite Vo in term o f Va and set it to V_{CC} limit to ensure linearity

$$\frac{8 - V_a}{40} + \frac{8-9}{22} + \frac{8-13}{100} + \frac{8}{352} + \frac{8 - V_o}{220} = 0$$

$$V_o = 36 - 5.5V_a$$

$$-15 \le V_o = 36 - 5.5V_a \le 15 \quad for\ linearity$$

$$3.8 \le V_a \le 9.3$$

5S. The Op Amp in the following circuit is ideal.

a) What Op Amp circuit configuration is this?

b) Find Vo in term of Vs.

c) Find the range of values for Vs such that Vo does not saturate and the Op Amp remains in its linear region of operation.

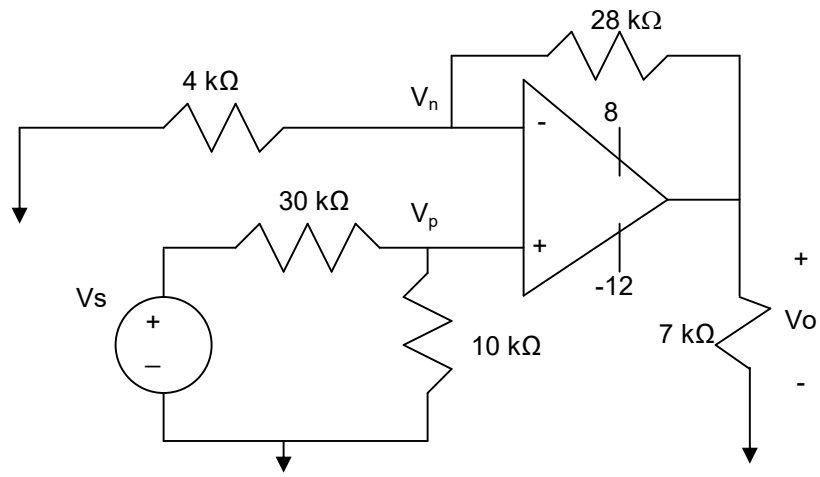

Solution:

a) Non-inverting, source is connected to positive input terminal

b) Find Vo in-terms of Vs

$$KCL\ at\ Node\ Vn \rightarrow \frac{V_n}{4} + \frac{V_n - V_o}{28} = 0$$

$$Ideal\ Op\ Amp \rightarrow Ip = In = 0 \rightarrow V_n = V_p$$

$$Voltage - divider \rightarrow V_p = \left(\frac{V_s}{30+10}\right) * 10 = \frac{V_s}{4} = Vn$$

$$Apply\ to\ KCL\ equation \rightarrow \frac{Vs}{16} + \frac{\frac{V_s}{4} - V_o}{28} = 0 \rightarrow V_o = 2\,V_s$$

c) Range of Vs so Op Amp is in linear region (not saturated)

$$-12 \le V_o = 2V_s \le 8 \quad for\ linearity$$

$$-6 \le V_s \le 4$$

5U. The Op Amp in the circuit shown below is ideal. What value of Rf will give the equation {Vo = 5 – 4Va} for this circuit.

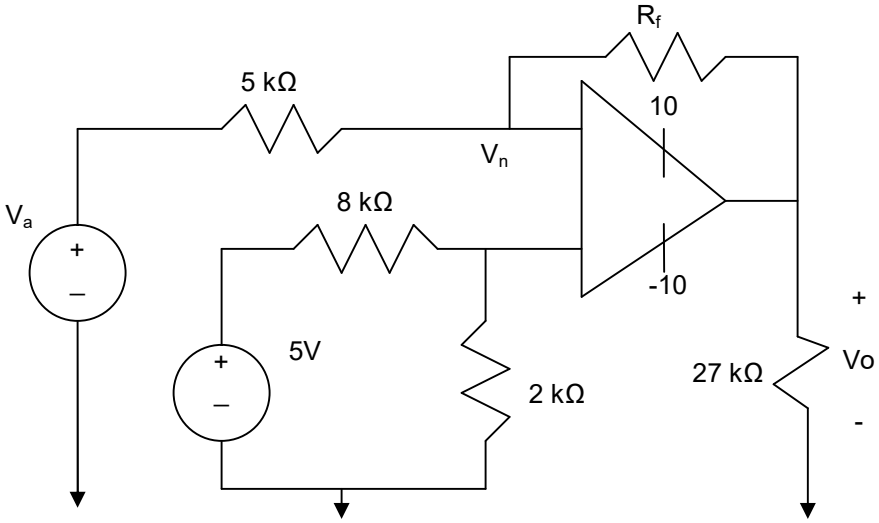

Solution:

6S. A voltmeter with a full-scale reading of 20 V and 10 MΩ internal resistances is used to measure the output voltage in the following circuit. Assuming the Op Amp is ideal, what is the reading of the voltmeter (Vm)?

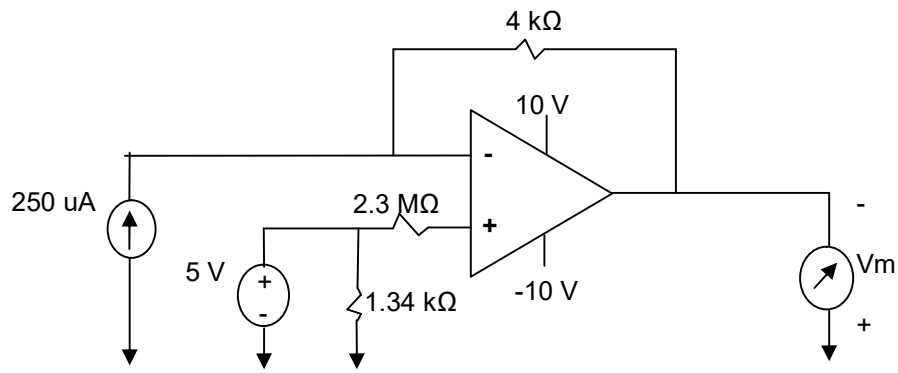

Solution:

KCL at Vn → $-250\times10^{-6} + (Vn - (-Vm)/4000 + In = 0$

Ideal Op Amp → In = Ip=0; Vn=Vp=5V.

Combine the above two equations

$-250\times10^{-6} + (5 + Vm)/4000 + 0 = 0$ → Vm = - 4 V

Voltmeter Reads -4 V.

6U. Suppose the strain gage resistors in the bridge shown in following figure have the value of 120 Ω ±1% (ΔR=1.2 Ω). The power supplies to the Op Amp ±10 V, and the reference voltage, Vref, is taken from the positive power supply.

a) Calculate the value of Rf so that when the strain gage that is lengthening reaches its maximum length, the output voltage is 5 V.

b) Suppose that we can accurately measure 50 mV changes in the output voltage. What change in strain gage resistance can be detected in milliohms?

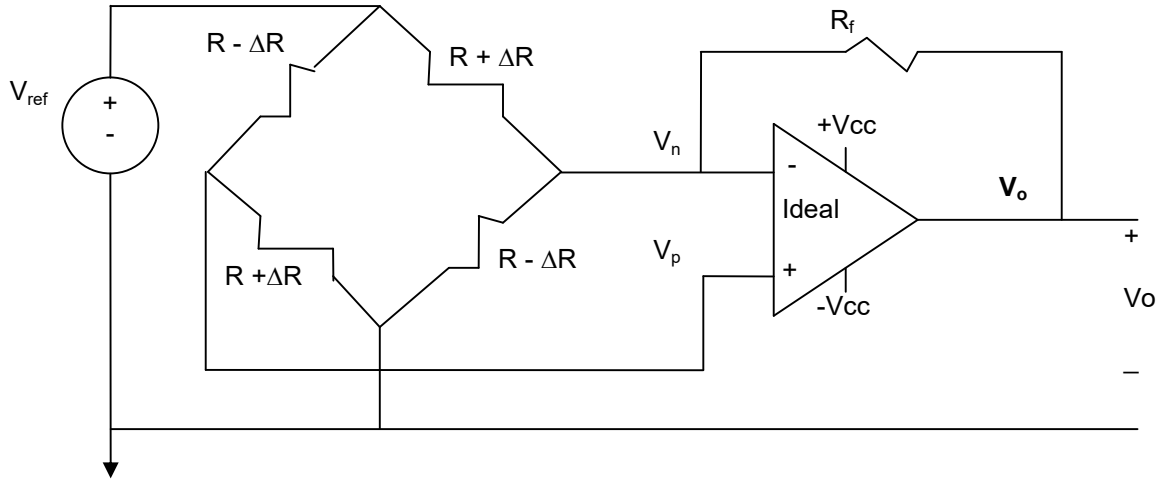

Solution:

6Sb. Strain gage (SG) resistance is 350 ohms and is layed out on flat surface about 18 mm long SG's resitance increases by 10% when stretched by 1 mm and conversely, its resistance decreases by 10% when shrunk by 1 mm. Two SGs are attached to left and right side of a column at point of deflection.

a) Design a circuit using resistors, 12 v battery, Op Amps (Ideal), LEDs and SGs to turn on a red LED when the column is bending to the right and turn the green LED when the column is bending to the left.

b) For the the designed circuit, calculate Vog (Voltage at the Green LED) and Vor (Voltage at the Red LED) when the column is deflect at point of SG attachement by 1 mm.

Solution:

One Possible solution**:**

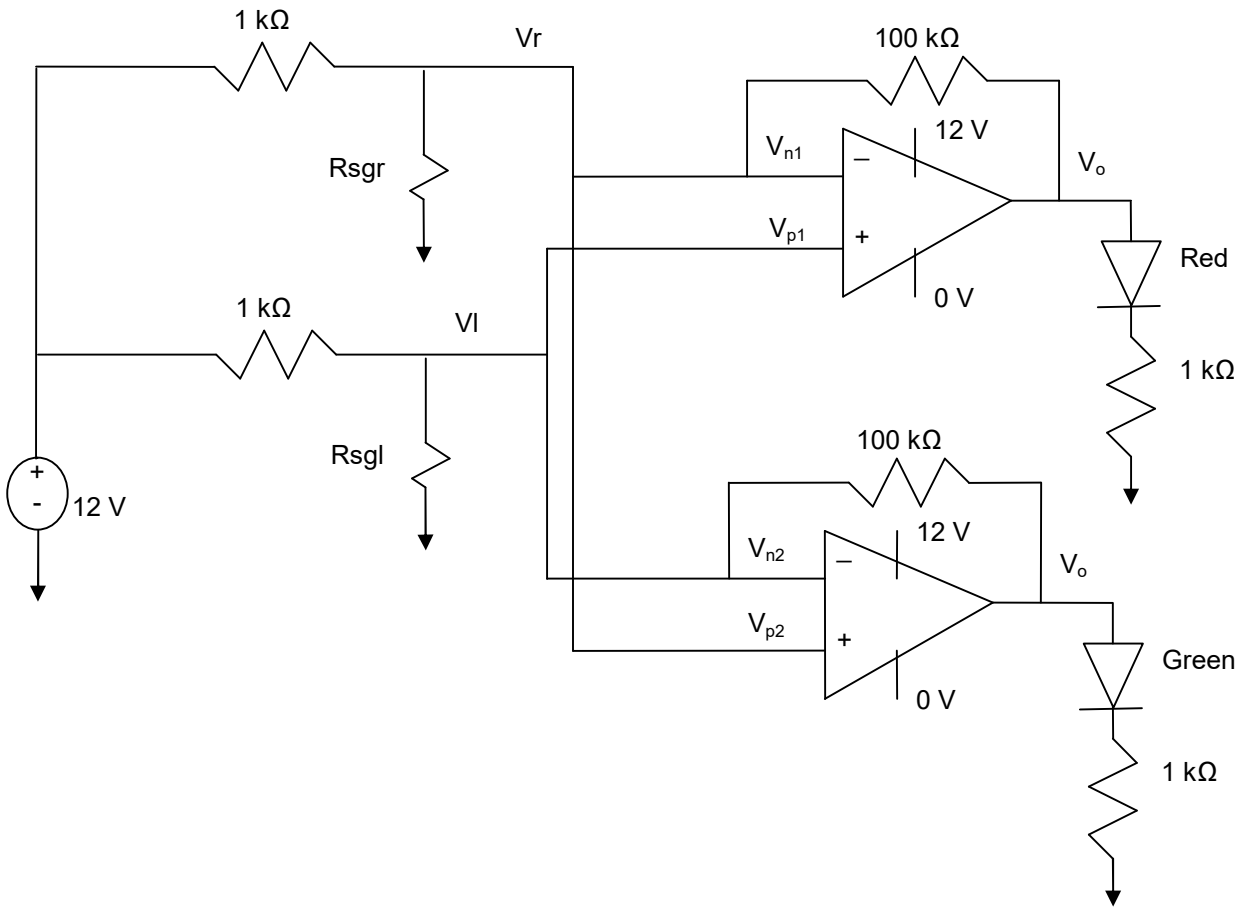

6Sc. Find i_o in the following circuit. Assume an Ideal Op Amp. Current at I_a = 0.55mA, at I_b = 0.75mA, and at I_c = 0.25mA.

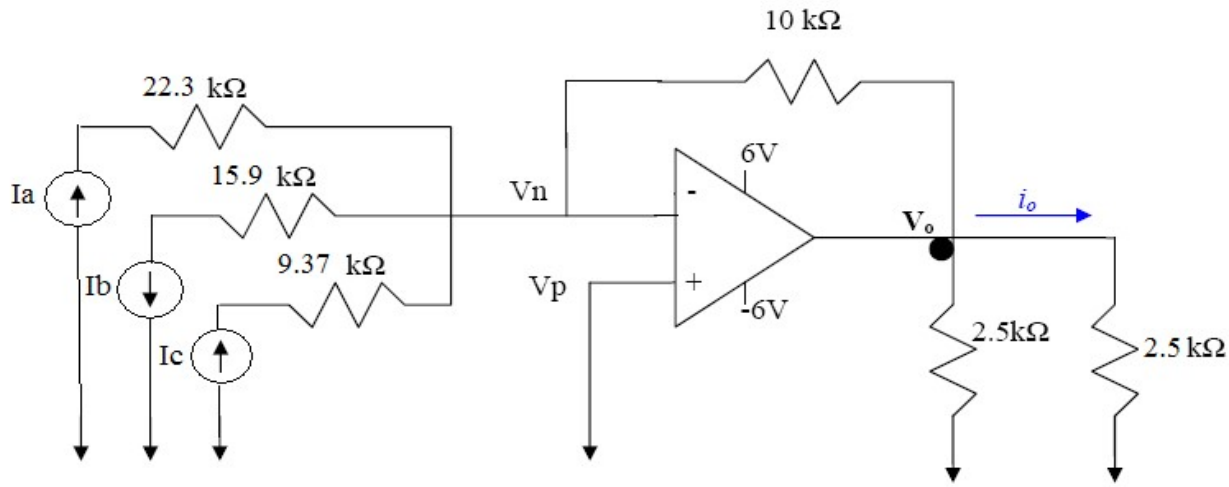

Solution:

KCL @ Vn $\quad -0.55 + 0.75 - 0.25 + (V_n - V_o)/10 = 0$

Ideal Op Amp states: $I_n = I_p = 0$ & $V_n = V_p = 0$

$$-0.05 = V_o/10$$

$$V_0 = -0.5 \text{ V}$$

$I_o = V_o/R = -0.5/2.5 = -1/5 = -0.20$ mA

7S. For the following circuit and using ideal OpAmp Model:

a) What Op Amp configuration is this?

b) Find i_o.

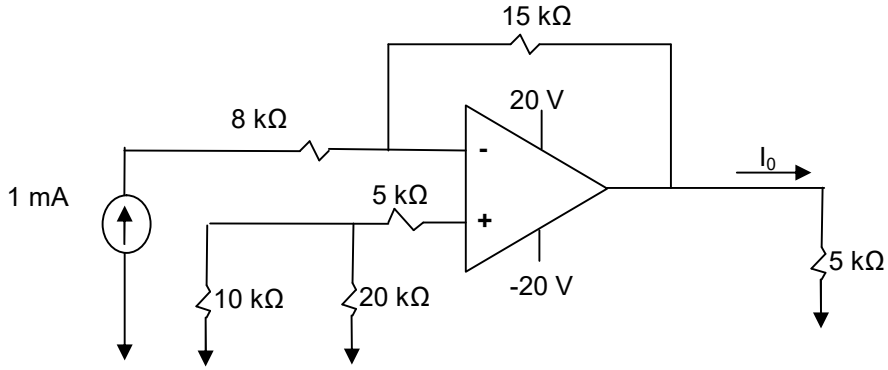

Solution:

a) The circuit is an inverting amplifier, because the source is connected to the negative input terminal.

b) KCL at Vn: $\quad -1 + (Vn-Vo)/15 + In = 0$

Apply Ideal Op Amp: $Ip = In = 0$ and $Vn = Vp = 0$

So, $\quad Vo/15 = 1 \;\text{-->}\; Vo = -15V$

Now, $\quad I_o = V_o/5 = -15/5 \;\text{-->}\; \underline{I_o = -3mA}$

7U. Find V_o assuming an Ideal Op Amp.

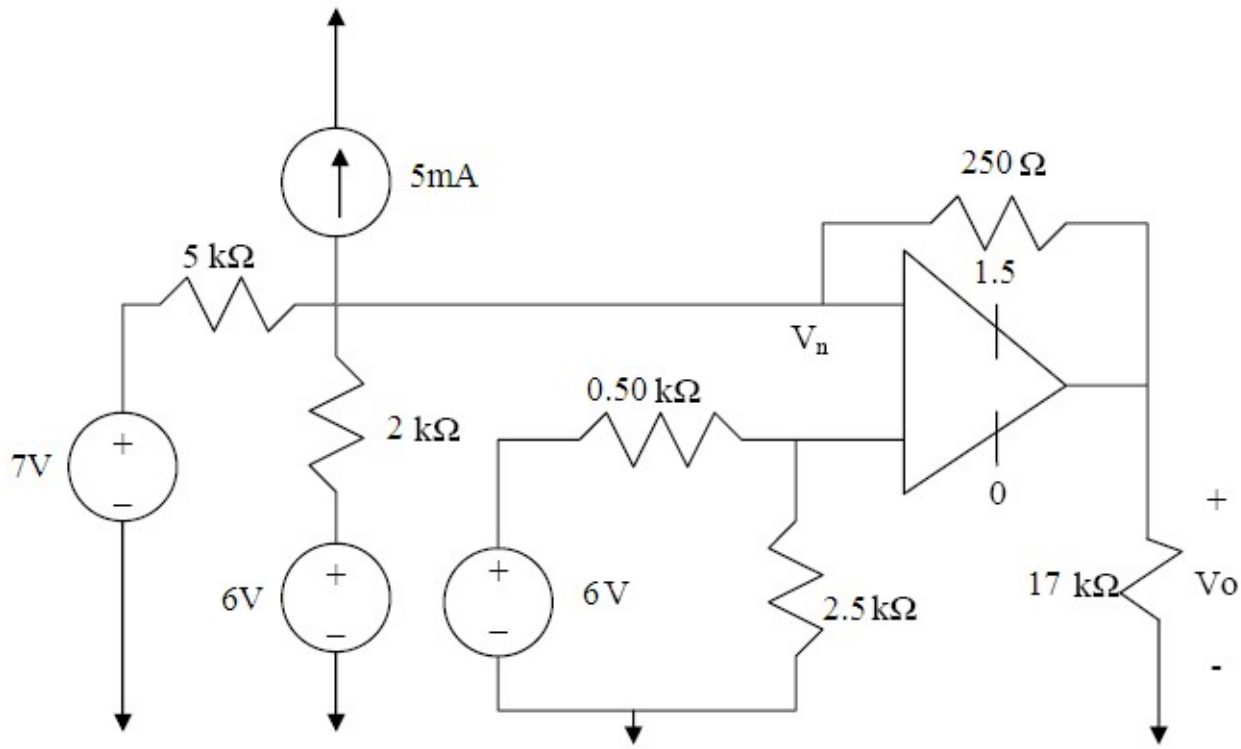

Solution:

KCL at Vn → $(V_n-7)/5 + (V_n-6)/2 + 5 + (V_n - V_o)/0.250 = 0$
KCL at Vp → $(V_p - 6)/0.5 + Vp / 2.5 = 0$

Ideal Op Amp → $I_n = I_p = 0$ & Vp = Vn

To be completed

7Sc. Calculate the value of I_o for the difference-amplifier circuit shown below (Idea Op Amp).

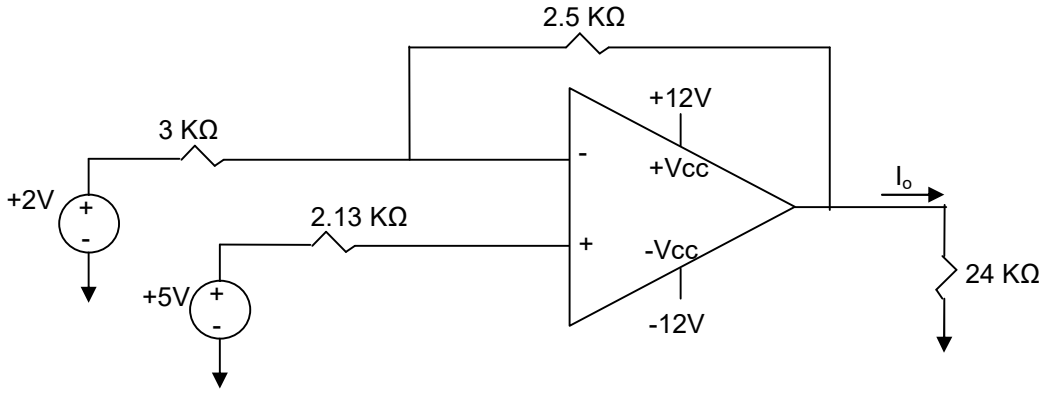

Solution:

KCL @ Vn → $\frac{Vn-2}{3}+\frac{Vn-Vo}{2.5}=0$

Ideal Op Amp → Ip=In=0 & Vn = Vp = 5

Therefore: $\frac{5-2}{3}+\frac{5-Vo}{2.5}=0$ → Vo = 7.5 → Io = Vo / 24 K = 0.3125 mA

7Sd. Calculate the value of V_o for the difference-amplifier circuit shown below (Using Idea OpAmp Model):

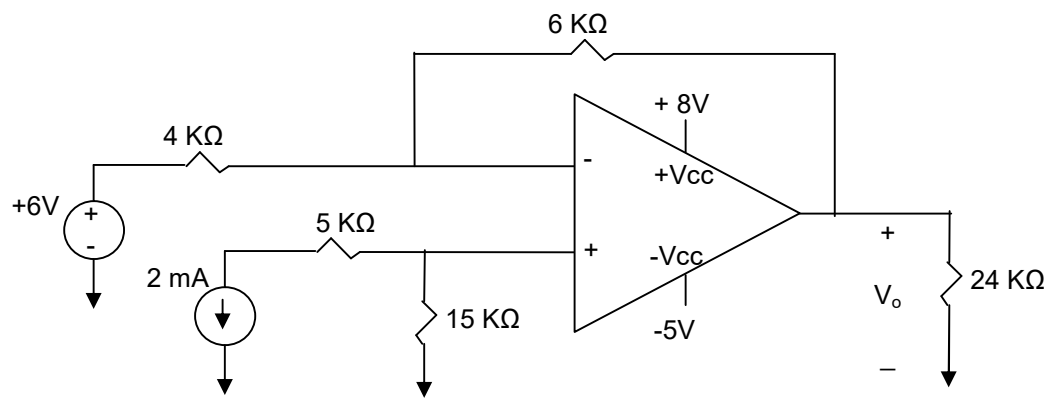

Solution

KCL @ Vn → $\frac{Vn-6}{4}+\frac{Vn-Vo}{6}=0$

Ideal Op Amp → Ip=0, In=0 & Vp = Vn → Vp = -15*2 = -30 V

Therefore: $\frac{-30-6}{4}+\frac{-30-Vo}{6}=0$ → Vo = -84V

The OpAmp saturates at -5 V → Vo = -5 V

7Se. In the following circuit, using ideal Op Amp model:

a) Find Vo in terms of V_a and I_b
b) Calculate Vo for V_a = 0.1V and I_b = 2 mA

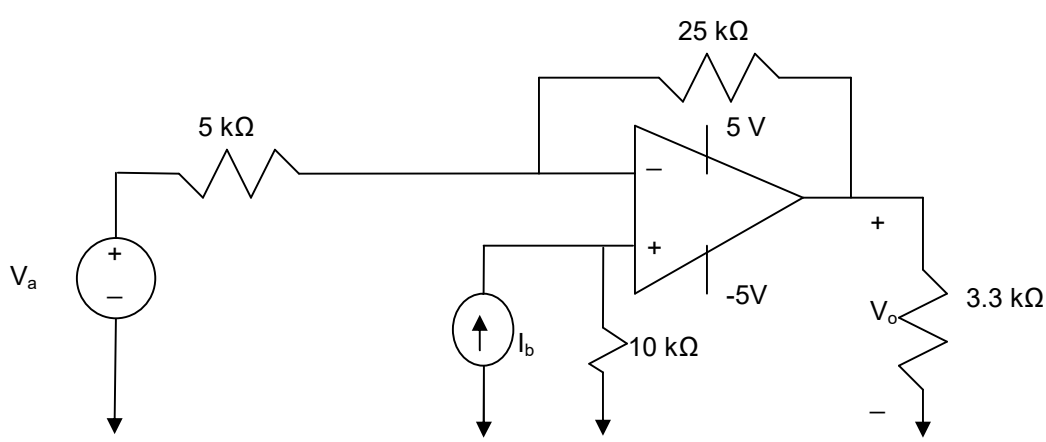

Solution:

a) KCL at Vn → (Vn –Va)/5000 + (Vn – Vo)/25000 = 0
Vn = Vp = 10000I_b

$(10000\ I_b - Va)/5000 + (10000\ I_b - Vo)/25000 = 0 \rightarrow Vo = 60000 I_b - 5Va$

b) Vo = 5 V (limited by the rail – saturated)

7Sf. For the following Op Amp circuit, Find Vo using an Ideal op Amp model.

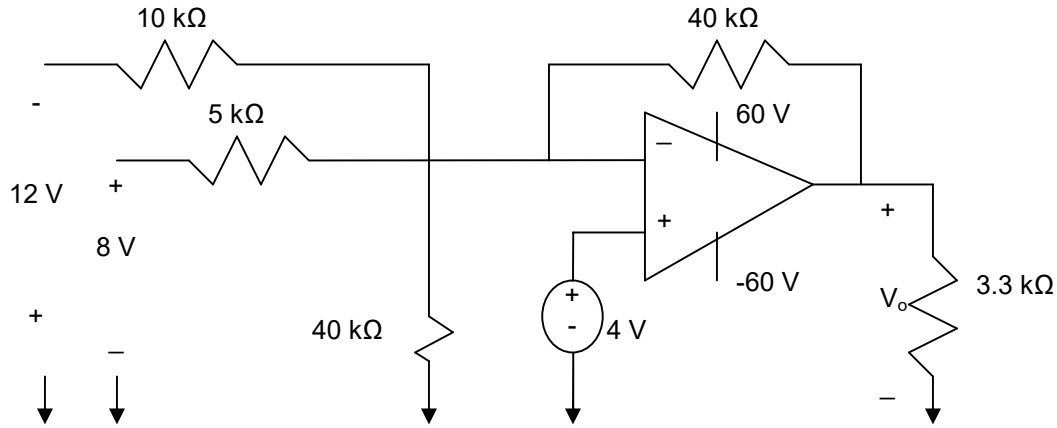

Solution:

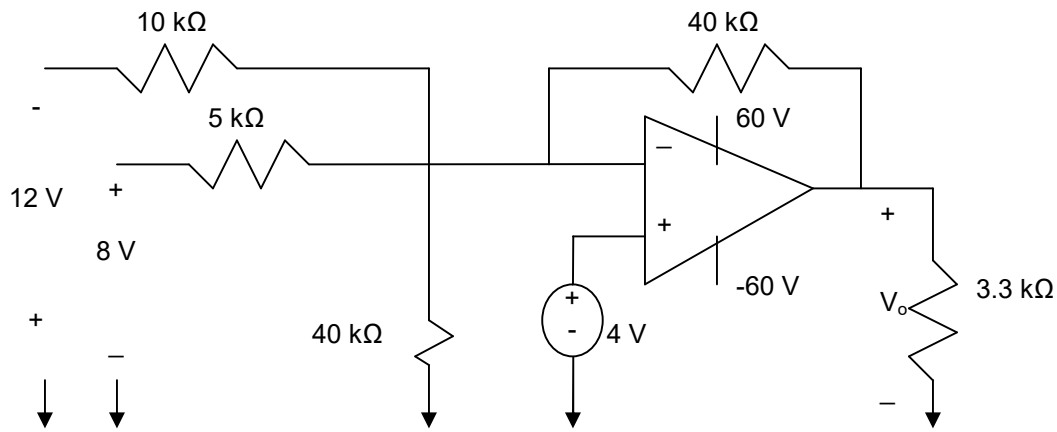

$$KCL\ at\ Node\ Vn \rightarrow \frac{V_n + 12}{10} + \frac{V_n - 8}{5} + \frac{V_n}{40} + \frac{V_n - V_o}{40} = 0$$

$$Ideal\ Op\ Amp \rightarrow Ip = In = 0 \rightarrow V_n = V_p = 4$$

$$Apply\ to\ KCL\ equation \rightarrow \frac{4+12}{10} + \frac{4-8}{5} + \frac{4}{40} + \frac{4 - V_o}{40} = 0$$

$$V_o = 40\ V$$

The output within the rail voltages…

8S. In the difference amplifier shown below, compute

a) the differential mode gain
b) the common mode gain

c) the CMRR

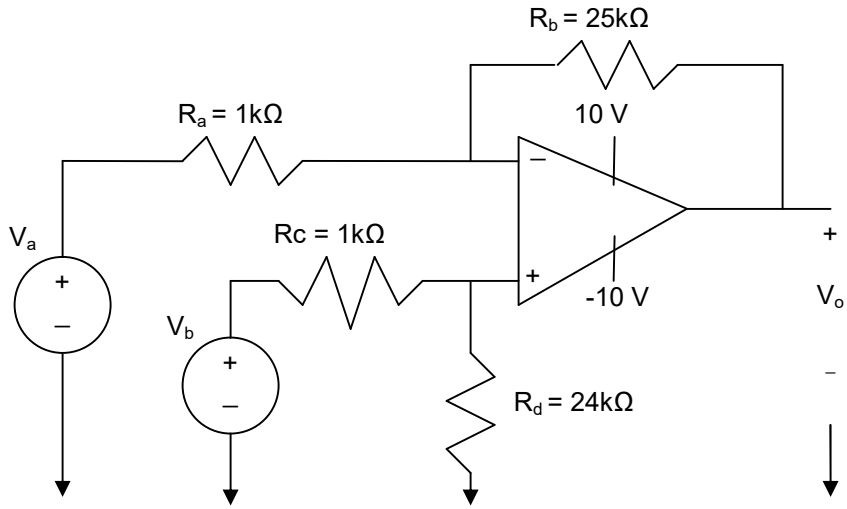

Solution:

a) Common Mode Gain = A_{cm} = $\frac{V_o}{V_{cm}} = \frac{R_a R_d - R_b R_c}{R_a(Rc + R_d)} = \frac{24-25}{1*(1+24)} = -\frac{1}{25}$

b) Difference Mode Gain

$$A_{dm} = \frac{V_o}{V_{dm}} = \frac{R_d(R_a + R_b) + R_b(R_c + R_d)}{2R_a(Rc + R_d)} = \frac{24(1+25)+25(1+24)}{2*1*(1+24)} = 24.98$$

c) Common Mode Rejection Ratio = CMRR = $\left|\frac{A_{dm}}{A_{cm}}\right| = \left|\frac{24.98}{-\frac{1}{25}}\right| = 624.5$

8U. In the difference amplifier shown below, compute

a) the differential mode gain
b) the common mode gain
c) the CMRR

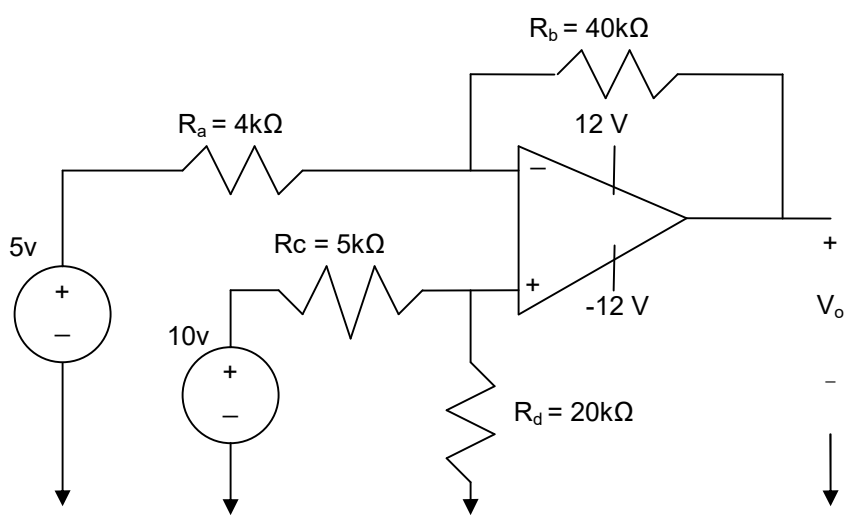

Solution:

9S. Find i_o in the following circuit using Op Amp DC Model where open loop gain, A= 10,000 , Input resistance, Ri of 200 kΩ and output resistance, Ro of 50 Ω.

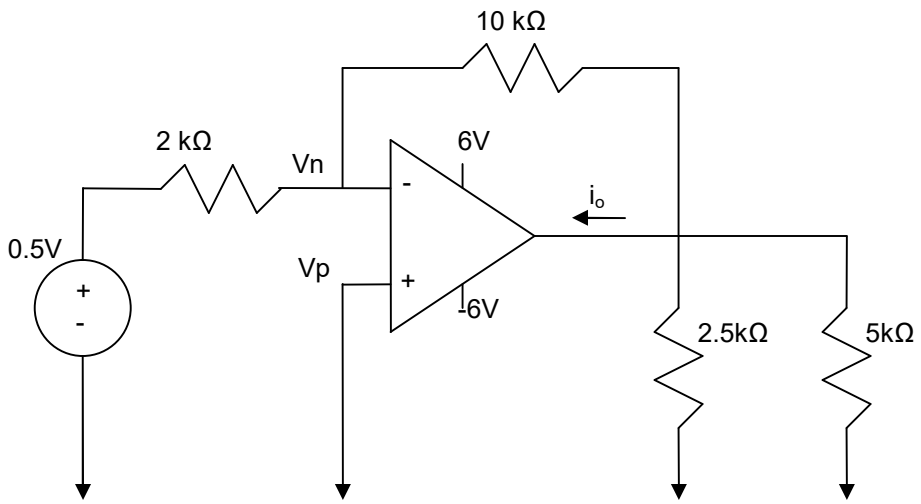

Solution:
redraw the circuit with Op Amp DC Mode and use Node Voltage to analyze the circuit:

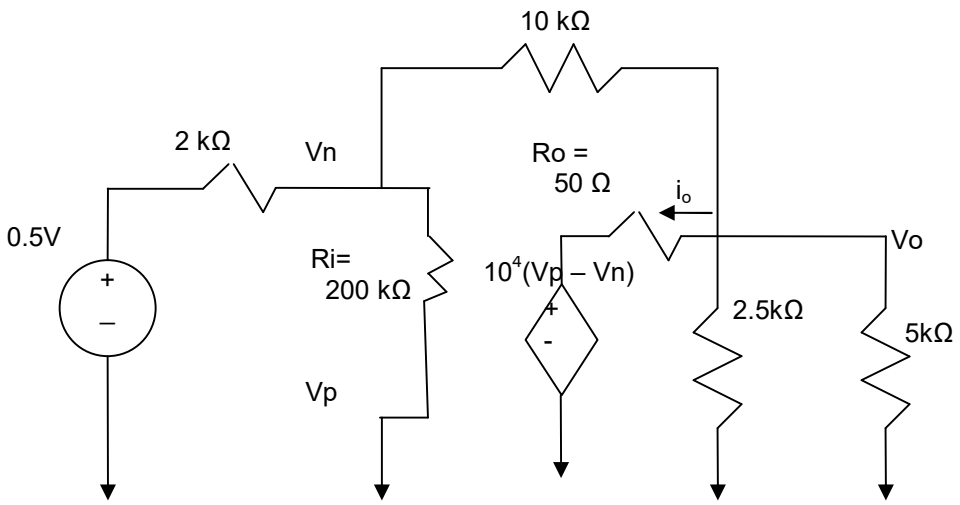

3 essential nodes Vo, Vn & reference node.
KCL at Vn → (Vn – 0.5)/2,000 + Vn/200,000 + (Vn – Vo)/10,000 = 0
KCL at Vo → (Vo – Vn)/10,000 + Vo/5,000 + Vo/2,500 + (Vo – 10^4(-Vn))/50 = 0

Simplify the equations:
121Vn – 20Vo = - 50
($2x10^6$ -1)Vn – 207V0 = 0

Solve to find Vo & Io

9U. Find V_o in the following circuit using LM 324 Op Amp DC Model where open loop gain, A= 10^5 , Input resistance, Ri of 2 MΩ and output resistance, Ro of 75 Ω.

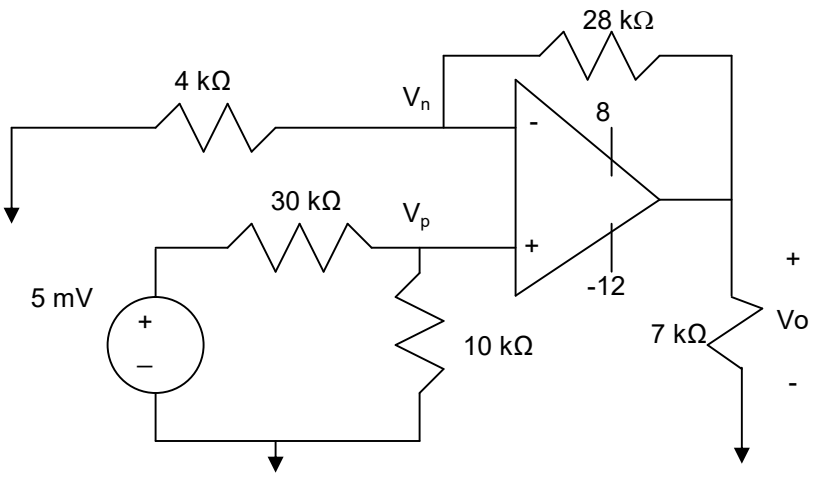

Solution: